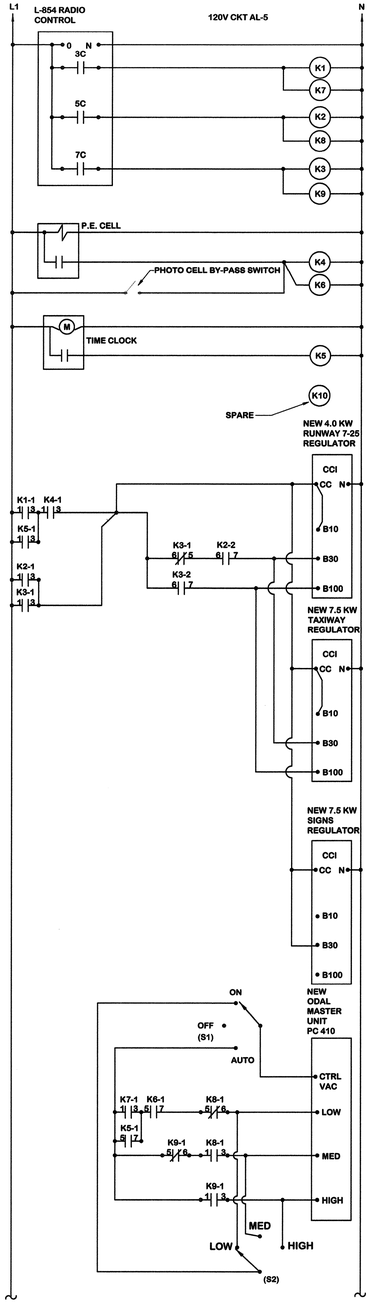

CONTROL WIRING DIAGRAM

N.T.S.

CONTROL WIRING DIAGRAM DEVICES

SYMBOL	DESCRIPTION
	PHOTOCELL. CROUSE HINDS NO. 52010 OR APPROVED EQUALS. PHOTOCELL SHALL HAVE TIME DELAY BUILT IN.
	L-854 RADIO CONTROL UNIT. PROVIDE NEW ANTENNA, COAX CABLE AND CONNECTORS INSTALLED COMPLETE.
	TIME CLOCK IN NEMA 1 ENCLOSURE. 120 VOLT CLOCK, DPST, WITH SPRING CARRY OVER. TORK NO. 7200L OR APPROVED EQUALS.
K1 K2 K3 K4 K5 K6 K7 K8 K9 K10	CONTROL RELAY. 3P, DT,11 PIN, PILOT LIGHT, 12 AMP CONTACTS AND 120 VOLT CONTROL. MOUNT RELAY IN SOCKET. SCHNEIDER ELECTRIC NO.KP13P14V20 WITH 11 PIN SOCKET OR EQUALS. PROVIDE WITH 8501 SOCKETS AND COMPLETE DIN 3 TRACK MOUNT SYSTEM, OR EQUALS. NEMA 12, 30"H x 30"W x 8"D WITH HINGED DOOR, BACK PANEL AND TRACK MOUNTING RAILS. HOFFMAN NO. A303008LP OR EQUALS. PROVIDE TERMINAL BLOCKS SCHNEIDER ELECTRIC GR6 OR EQUALS. PROVIDE I.D. LABELS ON ALL WIRING. PROVIDE ONE RELAY AND SOCKET SPARE ("K10") MOUNTED TO THE TRACK. LABEL AS SPARE.
C1	4P/30A/240V CONTACTOR IN NEMA 1 ENCLOSURE WITH 120 VOLT COIL AND "H-O-A" SWITCH ON COVER. SCHNEIDER ELECTRIC NO. SMG3-VO2 WITH FORM C SWITCH OR APPROVED EQUALS.
S1	BAT LEVER TOGGLE SWITCH, THREE POSITION MAINTAINED CONTACT, RATED 10 AMPS AT 125 VOLTS, SCREW TERMINALS.
S2	ROTARY SELECTOR SWITCH, THREE POSITION MAINTAINED CONTACT, RATED 10 AMPS AT 125 VOLTS, SCREW TERMINALS.
S1	BAT LEVER TOGGLE SWITCH, TWO POSITION MAINTAINED CONTACT, RATED 10 AMPS AT 125 VOLTS, SCREW TERMINALS.
CS	CURRENT SENSING RELAY.

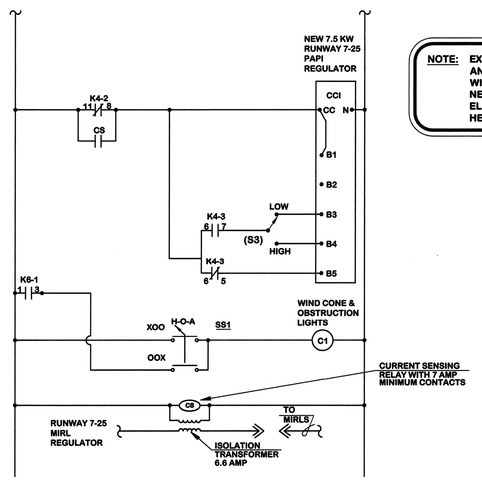

NOTE: EXISTING ELECTRICAL RACEWAYS, WIRING AND ELECTRICAL APPARATUS SHOWN WITH LIGHT OR SCREENED LINE WEIGHT. NEW ELECTRICAL RACEWAYS, WIRING AND ELECTRICAL APPARATUS SHOWN WITH HEAVY OR DARK LINE WEIGHT.

NOTE: THE CONTRACTOR SHALL PROVIDE A COMPLETE WIRING DIAGRAM OF THE CONTROL SYSTEM AS INSTALLED INDICATING TERMINAL POINT CONNECTIONS BY NUMBER. WIRING DIAGRAM SHALL BE ENCLOSED IN PROTECTIVE PLASTIC HOLDER AND MOUNTED INSIDE THE RELAY CABINET DOOR.

SEQUENCE OF OPERATION

1. **RUNWAY LIGHTS REGULATOR:** THE RUNWAY 7-25 EDGE LIGHTS ARE NORMALLY OFF DURING DAYLIGHT HOURS AS CONTROLLED BY THE PHOTO CELL. THE LIGHTS CAN BE TURNED ON DURING DAYLIGHT HOURS TO 30% OR 100% FOR A FIFTEEN MINUTE INTERVAL BY THE PILOT KEYING THE RADIO MICROPHONE FIVE CLICKS (30%) OR SEVEN CLICKS (100%) AT THE AIRPORT UNICOM FREQUENCY. 3 CLICKS WILL NOT ACTIVATE THE RUNWAY LIGHTS DURING DAYLIGHT HOURS AS CONTROLLED BY THE PHOTOCELL. THE LIGHTS WILL TURN "ON" AT DUSK TO 10% INTENSITY AND REMAIN ON UNTIL TURNED "OFF" AT A SELECTABLE TIME BY THE TIME CLOCK. THE LIGHTS INTENSITY CAN BE CHANGED BY THE RADIO CONTROLLER AT 30% OR 100% INTENSITY FOR A FIFTEEN MINUTE INTERVAL BY KEYING THE RADIO MICROPHONE FIVE CLICKS OR SEVEN CLICKS RESPECTIVELY. THE LIGHTS CAN BE TURNED ON DURING THE REMAINDER OF THE NIGHT BY THE RADIO CONTROLLER AT 10%, 30% OR 100% INTENSITY FOR A FIFTEEN MINUTE INTERVAL BY KEYING THE RADIO MICROPHONE THREE CLICKS, FIVE CLICKS OR SEVEN CLICKS RESPECTIVELY.

2. **TAXIWAY LIGHTS REGULATOR:** THE TAXIWAY EDGE LIGHTS ARE NORMALLY OFF DURING DAYLIGHT HOURS AS CONTROLLED BY THE PHOTO CELL. THE LIGHTS CAN BE TURNED ON DURING DAYLIGHT HOURS TO 30% OR 100% FOR A FIFTEEN MINUTE INTERVAL BY THE PILOT KEYING THE RADIO MICROPHONE FIVE CLICKS (30%) OR SEVEN CLICKS (100%) AT THE AIRPORT UNICOM FREQUENCY. 3 CLICKS WILL NOT ACTIVATE THE TAXIWAY LIGHTS DURING DAYLIGHT HOURS AS CONTROLLED BY THE PHOTOCELL. THE LIGHTS WILL TURN "ON" AT DUSK TO 10% INTENSITY AND REMAIN ON UNTIL TURNED "OFF" AT A SELECTABLE TIME BY THE TIME CLOCK. THE LIGHTS INTENSITY CAN BE CHANGED BY THE RADIO CONTROLLER AT 30% OR 100% INTENSITY FOR A FIFTEEN MINUTE INTERVAL BY KEYING THE RADIO MICROPHONE FIVE CLICKS OR SEVEN CLICKS RESPECTIVELY. THE LIGHTS CAN BE TURNED ON DURING THE REMAINDER OF THE NIGHT BY THE RADIO CONTROLLER AT 10%, 30% OR 100% INTENSITY FOR A FIFTEEN MINUTE INTERVAL BY KEYING THE RADIO MICROPHONE THREE CLICKS, FIVE CLICKS OR SEVEN CLICKS RESPECTIVELY.

3. **RUNWAY 25 ODALS:** THE RUNWAY 25 EXISTING ODAL LIGHTS ARE NORMALLY OFF DURING DAYLIGHT HOURS AS CONTROLLED BY THE PHOTO CELL. THE LIGHTS CAN BE TURNED ON DURING DAYLIGHT HOURS TO MEDIUM OR HIGH FOR A FIFTEEN MINUTE INTERVAL BY THE PILOT KEYING THE RADIO MICROPHONE FIVE CLICKS (MED.) OR SEVEN CLICKS (HIGH) AT THE AIRPORT UNICOM FREQUENCY. 3 CLICKS WILL NOT ACTIVATE THE APPROACH LIGHTS DURING DAYLIGHT HOURS AS CONTROLLED BY THE PHOTOCELL. THE LIGHTS WILL TURN "ON" AT DUSK TO LOW INTENSITY AND REMAIN ON UNTIL TURNED "OFF" AT A SELECTABLE TIME BY THE TIME CLOCK. THE LIGHTS INTENSITY CAN BE CHANGED BY THE RADIO CONTROLLER TO MEDIUM OR HIGH INTENSITY FOR A FIFTEEN MINUTE INTERVAL BY KEYING THE RADIO MICROPHONE FIVE CLICKS OR SEVEN CLICKS RESPECTIVELY. THE APPROACH LIGHTS CAN BE TURNED ON DURING THE REMAINDER OF THE NIGHT BY THE RADIO CONTROLLER AT LOW, MEDIUM OR HIGH INTENSITY FOR A FIFTEEN MINUTE INTERVAL BY KEYING THE RADIO MICROPHONE THREE CLICKS, FIVE CLICKS OR SEVEN CLICKS RESPECTIVELY.

4. **AIRFIELD GUIDANCE SIGNS REGULATOR:** THE AIRFIELD GUIDANCE SIGN INTERNAL LAMPS ARE NORMALLY OFF DURING DAYLIGHT HOURS AS CONTROLLED BY THE PHOTO CELL. THE SIGNS OPERATE AT A CONSTANT 5.5 AMPS WHEN TURNED "ON". THE RADIO CONTROLLER DOES NOT VARY THE GUIDANCE SIGNS INTERNAL LAMPS INTENSITY.THE LAMPS CAN BE TURNED ON DURING DAYLIGHT HOURS FOR A FIFTEEN MINUTE INTERVAL BY THE PILOT KEYING THE RADIO MICROPHONE FIVE CLICKS OR SEVEN CLICKS AT THE AIRPORT UNICOM FREQUENCY. 3 CLICKS WILL NOT ACTIVATE THE SIGN INTERNAL LAMPS DURING DAYLIGHT HOURS AS CONTROLLED BY THE PHOTOCELL. THE LIGHTS WILL TURN "ON" AT DUSK AND REMAIN ON UNTIL TURNED "OFF" AT A SELECTABLE TIME BY THE TIME CLOCK. THE SIGNS INTERNAL LAMPS CAN BE TURNED ON DURING THE REMAINDER OF THE NIGHT BY THE RADIO CONTROLLER AT A CONSTANT 5.5 AMPS INTENSITY FOR A FIFTEEN MINUTE INTERVAL BY KEYING THE RADIO MICROPHONE THREE CLICKS, FIVE CLICKS OR SEVEN CLICKS RESPECTIVELY.

5. **R/W 7 AND R/W 25 PAPI:** PAPI IS ON AT 100% BRIGHTNESS DURING DAYLIGHT HOURS AS CONTROLLED BY THE PHOTO CELL. PAPI IS ON AT 4% OR 20% BRIGHTNESS DURING DUSK AND NIGHT TIME AS SELECTED BY THE "HIGH-LOW" SELECTOR SWITCH, ONLY WHEN THE RUNWAY LIGHTS ARE ON AS CONTROLLED BY THE PHOTO CELL AND CURRENT SENSING RELAY.

6. **WIND CONE LIGHTS & VAULT BUILDING OBSTRUCTION LIGHTS:** THE WIND CONE LIGHTS AND VAULT BUILDING OBSTRUCTION LIGHTS ARE CONTROLLED BY THE PHOTOCELL AND IS "ON" AT DUSK AND "OFF" AT DAWN. THE WIND CONE AND OBSTRUCTION LIGHTS CAN BE MANUALLY CONTROLLED BY THE "H-O-A" SWITCH ON THE CONTACTOR.

PROVIDE ENGRAVED CONTROL ACTION IDENTIFICATION PLATES. WHITE LETTERING ON BLACK BACKGROUND. ATTACH WITH STAINLESS STEEL SCREWS.

SWITCH IDENTIFICATION SHOWN IN PARENTHESIS USED IN CONTROL WIRING DIAGRAM (TYP.) DO NOT LABEL AS SUCH ON CONTROL PANEL.

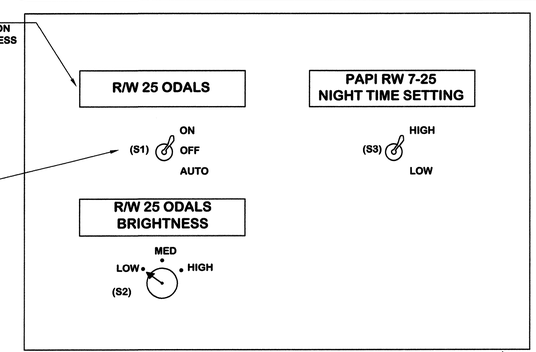

CONTROL SWITCH DETAIL

N.T.S.

NEMA 1 ENCLOSURE

AIKEN SOUTH CAROLINA

AIKEN MUNICIPAL AIRPORT

AIKEN, SOUTH CAROLINA

THE LPA GROUP

TRANSPORTATION CONSULTANTS

ATLANTA, GA BATON ROUGE, LA CHARLESTON, SC CHARLOTTE, NC CHICAGO, IL COLUMBIA, SC GREENSBORO, NC GULFPORT, MS JACKSONVILLE, FL KNOXVILLE, TN MOBILE, AL ORLANDO, FL RALEIGH, NC RICHMOND, VA SARASOTA, FL TALLAHASSEE, FL TAMPA, FL WEST PALM BEACH, FL

SOUTH CAROLINA THE LPA GROUP INCORPORATED No. C00448 CERTIFICATE OF AUTHORIZATION

SOUTH CAROLINA PROFESSIONAL ENGINEER LICENSED 5-2-4-11 No. 21653 GARY H. LOTT

Designer: FME/RES	Checked by: GHL
Technician: MTW	Project Number: 05500005

REVISIONS

No.	Description	Date	By

Project Name:

AIRFIELD LIGHTING REHABILITATION

Drawing Name:

CONTROL WIRING DIAGRAM PLAN NO. 1

FAA A.I.P. Project Number: 3-45-0002-12-2010 & -14-2011

Date: MAY, 2011	Division: AIRPORTS
Scale: N.T.S.	Sheet Number:
	Drawing Number: CWD-1

C:\ELECTRICAL\01 CLIENTS\Aiken\2010 Runway 7-25 and Taxiway Lighting\DWG\SINGLE-PHASE\AIK-VAULT LVP1-2 PRO-2 CWD1.dwg Last Modified: May 24, 2011 - 9:38am Plotted on: May 24, 2011 - 10:00am by TWhite

Q:\ELECTRICAL\01 CLIENTS\Aiken\2010 Runway 7-25 and Taxiway Lighting\DWG\SINGLE-PHASE\AIK-VAULT LVP1-2 PRO-2 CWD1.dwg, 5/24/2011 10:00:08 AM, Adobe PDF Printer (.PDF)