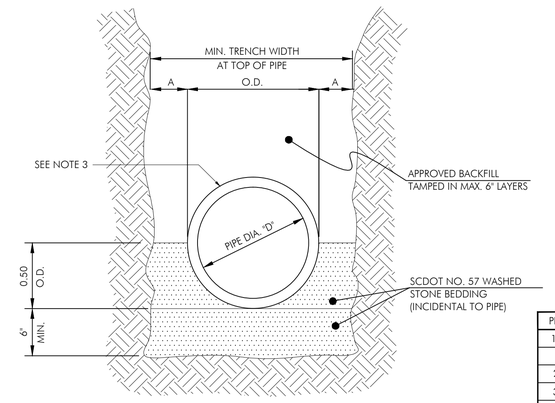

PIPE DIA. "D"	MIN. "A"
15" & LESS	8"
18" TO 21"	10"
24" TO 30"	12"
33" TO 42"	15"
48" & LARGER	18"

2 BEDDING DETAIL FOR STORM DRAIN PIPES

N.T.S.

RIP RAP PIPE OUTLET TABLE						
STRUCTURE	La	W_1	W_2	RIP RAP CLASS	d_{50}	DEPTH (d)
24" OUTLET	11'	6'	17'	A	0.5'	1.13'
36" OUTLET	20'	9'	29'	A	0.5'	1.13'

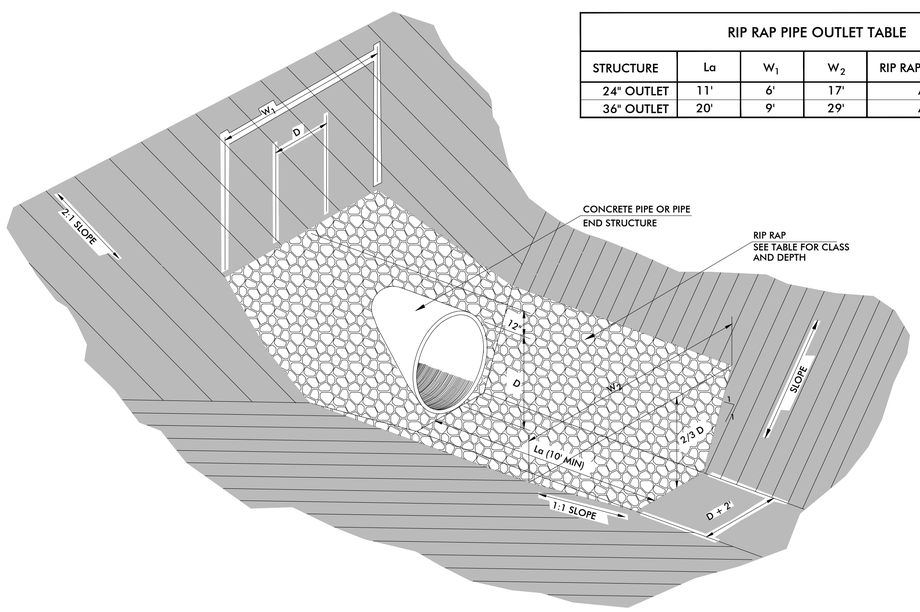

ISOMETRIC VIEW

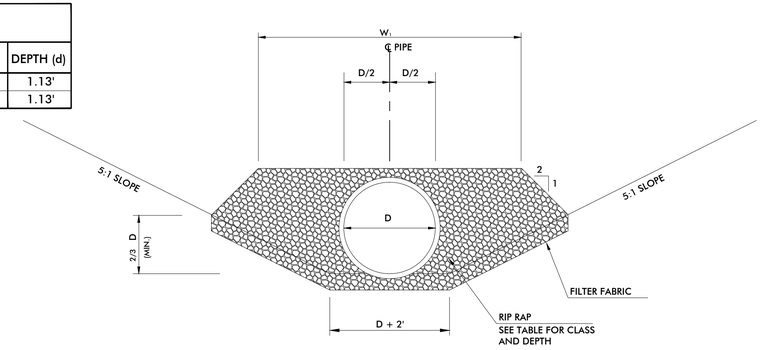

FRONT VIEW

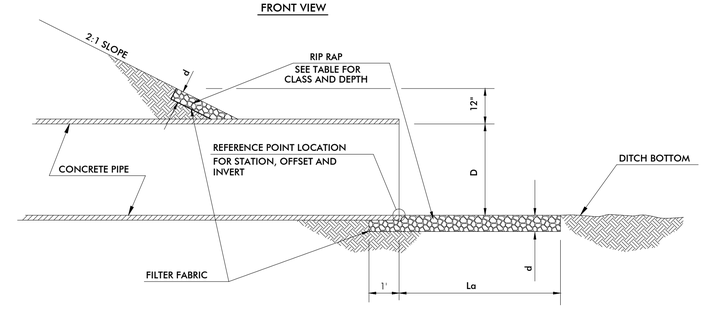

SECTION VIEW

STANDARD RIP RAP AT PIPE END TREATMENT

N.T.S.

AIKEN MUNICIPAL AIRPORT
AIKEN, SOUTH CAROLINA

THE LPA GROUP
TRANSPORTATION CONSULTANTS
A Unit of Michael Baker Corporation
Columbia, South Carolina
and other Major U.S. Cities

THE LPA GROUP INCORPORATED No. C00448 — CERTIFICATE OF AUTHORIZATION

SOUTH CAROLINA PROFESSIONAL ENGINEER No. 21252 — ANDY D. BUSBEE — 7-28-11

Designer: KLM/CKM	Checked by: CHM
Technician: NWM	Project Number: 121913

REVISIONS

No.	Description	Date	By

Project Name:
RUNWAY 7
GLIDE SLOPE PROJECT
BID PACKAGE NO. 1

Drawing Name:
DRAINAGE
DETAILS NO. 1

FAA A.I.P. Project Number:

Date: AUGUST, 2011	Division: AIRPORTS
Scale: NTS	Sheet Number:
	Drawing Number: DD-1

Q:\CLIENTS\Aiken\2010- RW 7 Glide Slope\DWG\AIK-RW-GS-DD.dwg Modified: Jul 28, 2011 - 2:35pm Plotted: Jul 28, 2011 - 2:37pm MParrish